SEDECO B-405 12V or 24V INDICATOR LIGHT

Unit: mm

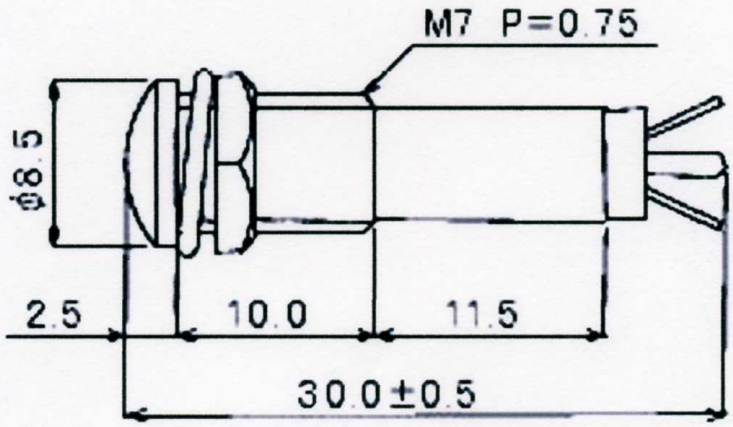

DATA	
Material of Body	Polycarbonate Resin
Color	Red, Blue, Green or Transparent
Voltage Breakdown	AC 1000V / minute
Insulation Resistance	DC 500V 100MOhm or more
Operating Temperature	−20℃ ～ +75℃
Shape of Terminal	Solder Terminal
Thread	Φ 7.0mm X Length 10.0mm Pitch = 0.75mm
Mounting Hole (Recommended)	Φ7.2mm
Voltage	12V or 24V