	REVISED	DR	APP

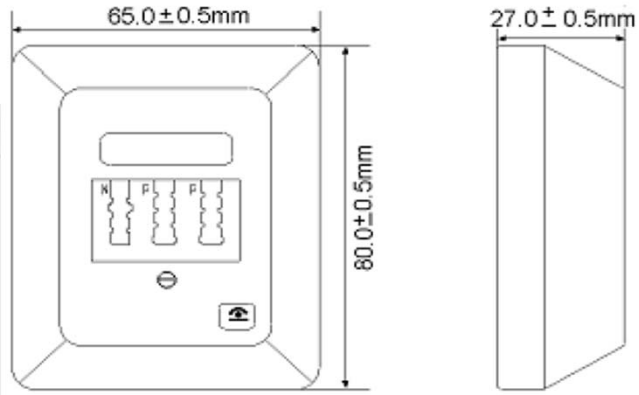

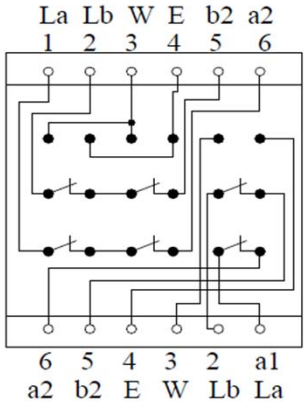

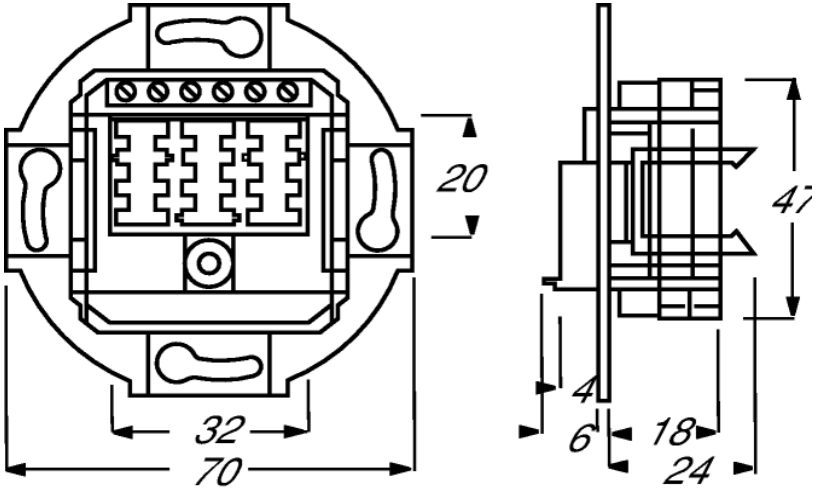

1590600

1590602

1	CONNECTORS	TAE-NF/F WALL SOCKET
2	MOLDING	
3	CABLE	
NO	PART NAME	

RoHS compliant

DESCRIPTION			**TAE-NF/F WALL SOCKET**				
SIZE	A4	DATE	09.01.2017	CHECKED		TOL	**266779+266795**
UNIT	MM	DRAWN	CHH	APPROVED			
CUSTOM TARIF NO.: 85366990990							